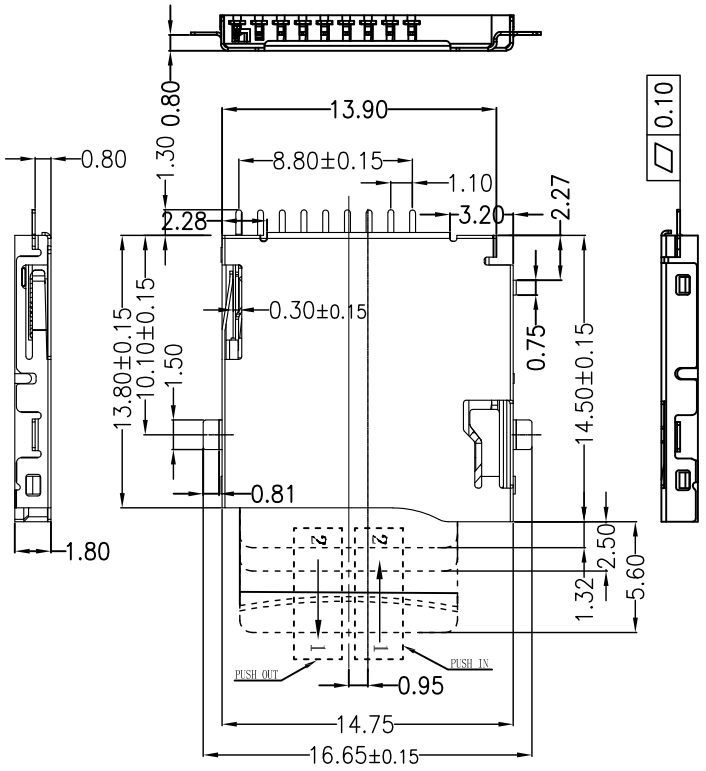

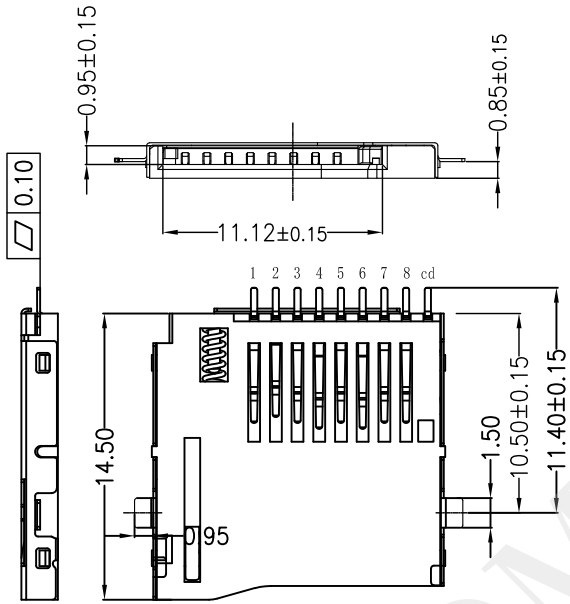

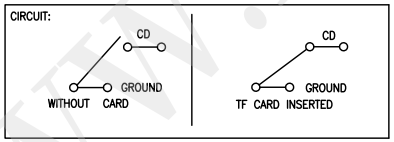

NO.	ASSIGNMENT	NO.	ASSIGNMENT
1#	DAT2	5#	CLK
2#	CD/DAT3 [2]	6#	VSS
3#	CMD	7#	DAT0
4#	VDD	8#	DAT1

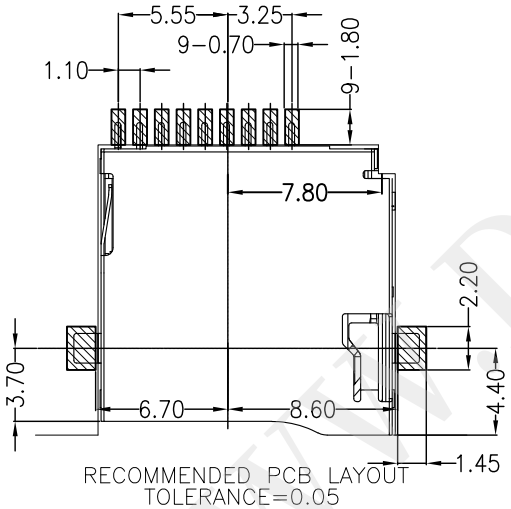

RECOMMENDED PCB LAYOUT
TOLERANCE=0.05

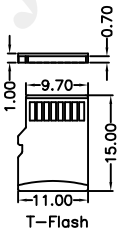

NOTES:

1.MATERIAL.

HOUSING: HIGH TEMPERATURE THERMOPLASTIC UL94V_0,COLOR:BLACK.

CONTACT: COPPER ALLOYS.

COVER: STEEL.

2.PLATING:

a.Contact:

UNDERPLATE: NICKEL.

CONTACT AREA: GOLD-PLATED

SOLDER AREA: TIN PLATING

b.Shell:

UNDERPLATE: NICKEL.

LATERAL FOOT BRUSH GOLD

3.MULTIMEDIA CARD COMPATIBLE

深圳市华宇创精密电子有限公司

HOAUG

TOLERANCE: X.X ±0.30 X.XX ±0.25 X.XXX ±0.15 X.° ±2° X.X° ±0.5°	DRAWED BY : 陈一鸣	DATE : 2014-02-23	PART NAME: TF PUSH 外焊两脚 沉板0.85
	CHECKED BY: 马跃	DATE : 2014-02-23	PART NO. HYC18-TF09-095
UNIT: mm [inch]	APPROVED BY: 邱敏	DATE : 2014-02-23	MOLD NO. / DRAW NO: HYC-2303131141
SCALE:1:1 SIZE: A4			SHEET NO. 1 OF 1